BB-5421/5422

B. E. III (Sem. VI) (ECC) Examination

May / June - 2006

Analog Integrated Circuits

Time : 3 Hours] [Total Marks : 100

BB-5421

Instructions :

(1)

નીચે દર્શાવેલ ☛ નિશાનીવાળી વિગતો ઉત્તરવહી પર અવશ્ય લખવી.
Fillup strictly the details of ☛ signs on your answer book.

Name of the Examination :
☛ B. E. III (Sem. 6) (ECC)

Name of the Subject :
☛ Analog Integrated Circuits

☛ Subject Code No. : 5 4 2 1 ☛ Section No. (1, 2,.....) : 1

Seat No. : 1 0 5 0 5 1

Student's Signature

(2) Attempt all questions.

(3) Assume suitable data wherever necessary.

(4) Each section must be answered in **separate** answer book.

1 (a) Design a Zener constant current bias circuit as shown (fig. 1) according to the following specifications : 6

(i) $I_{E3} = 5\ mA$

(ii) $V_z = 4.7\ V,\ I_{z1} = 53\ mA$

(iii) $\beta_{ac} = \beta_{dc} = 100$ and $V_{BE} = 0.715\ V$

(iv) $-V_{EE} = -9V$

$V_{CE} = V_{C1} - V_{E1}$

$V_{C1} = V_{CC} - I_C R_C$

$= 9 - 2.5$

$V_{BE_3} = V_{B_3} - V_{E_3}$

R_u ?

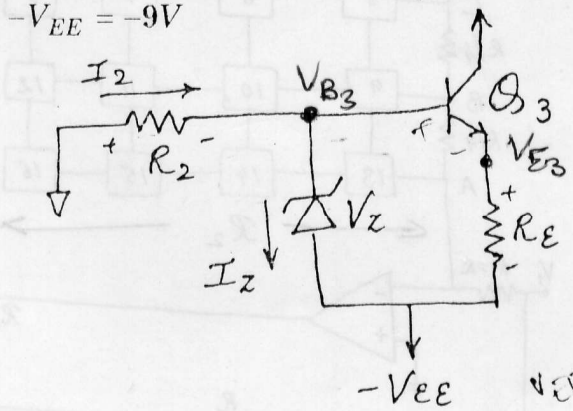

$V_{B_3} = -V_{EE} + V_Z$

$V_{E_3} = -V_{EE} + V_Z - V_{BE_3}$

$V_{E_3} = -9 + 4.7 - 0.715$

$= -5.015$

$\frac{V_{CE} - V_Z}{I_2}$

Fig. 1

$r_e = \frac{V_T}{I_{E_3}} = \frac{25\times10^{-3}}{5\times10^{-3}}$

$= 5\ \Omega$

$I_{E_3} = \frac{V_{E_3} - (-V_{EE})}{R_E}$

$A_V = \frac{R_E}{r_e}$

$R_E = \frac{-5.015 + 9}{5\times10^{-3}} = 797\Omega$

(b) Define the following terminologies with reference to op-amp 741-C : 6

(i) Slew rate (ii) Virtual ground (iii) Gain bandwidth product

(c) For the ckt below (fig. 2), plot $V_0 \rightarrow t \Rightarrow$ if V_i is triangular wave of 100 Hz and magnitude of $\pm 10\,V$, $\pm V_{sat} = \pm 12V$. 6

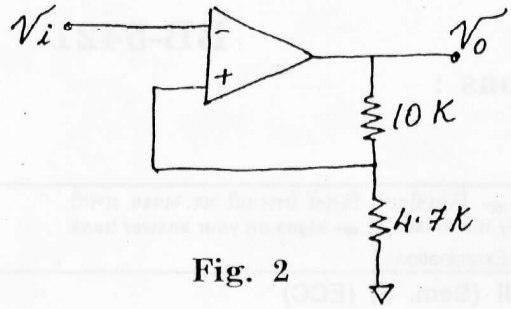

Fig. 2

2 (a) What is an instrumentation amplifier ? Where it can be used ? For it using a Transducer Bridge, prove that $V_0 \propto \Delta R$, where ΔR = change in Resistance of the Bridge. 8

(b) The circuit shown (fig. 3) is used to produce output voltage proportional to the key depressed. It operates with a standard key-board encorporated into the feedback resistor of inverting circuit (pushing any key connects it to the corresponding points). Find the generalized expression of any key depressed and output voltage :

(1) Key pressed

$R_2 = \frac{3R}{16} + \frac{3R}{4}$

$= \frac{15R}{16}$

(11) Key pressed

$R_2 = \frac{R}{4} + \frac{R}{16}$

$= \frac{5R}{16}$

(13) Key pressed

$R_2 = \frac{3R}{16}$

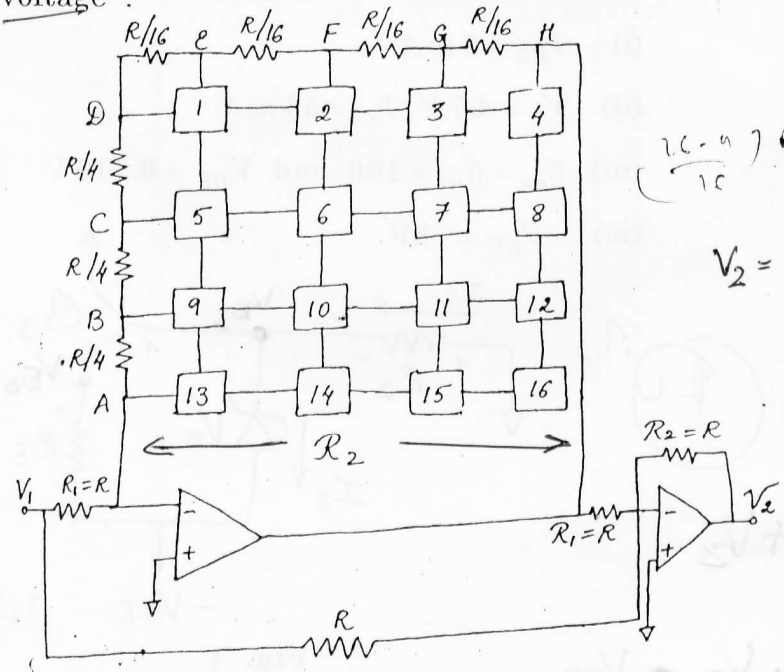

Fig. 3

$\left(\frac{16-n}{16}\right)R$

$V_a = \frac{-\left(1-\frac{n}{16}\right)R}{R} V_1$

$V_2 = -\frac{R}{R} V_a - \frac{R}{R} V_1$

$= -(V_a + V_1)$

$= -\left(\frac{n}{16} - 1 + 1\right) V_1$

In general, for $\boxed{n}$ key pressed

$$\boxed{R_2 = \left(1 - \frac{n}{16}\right) R}$$

OR

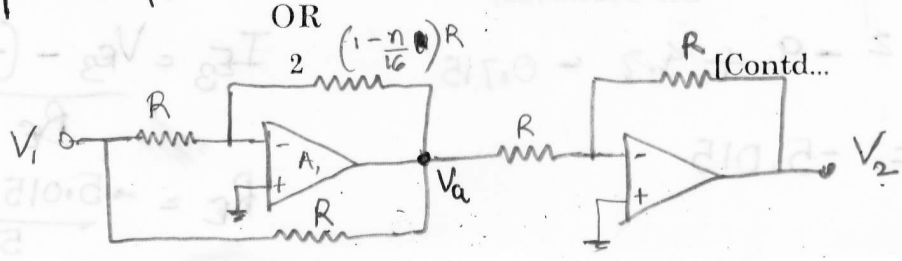

2 (a) For the circuit shown (fig. 4) : 10

(i) Find output voltage $V_0 = -\frac{R'}{R}V_1 + \left(1+\frac{R'}{R}\right)\left(\frac{R_1}{R_1+R_2}\right)V_2$

(ii) Show that the output corresponding to common mode voltage $V_c = \frac{1}{2}(V_1 + V_2) = 0$ if $(R'/R) = (R_1/R_2)$ find V_0 in this case

(iii) Find CMRR of the amplifier if $(R'/R) \neq (R_1/R_2)$

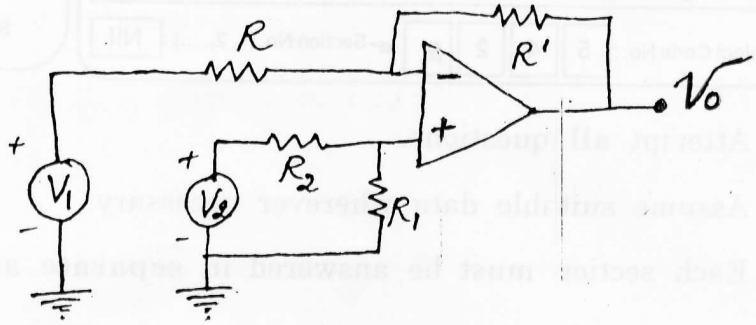

Fig. 4

(b) Explain the concept of LED tester using V to I conversion. 6

3 Attempt any two : 16

(a) Show that the frequency of oscillation for the following circuit (fig. 5) is : $\omega_0^2 = \frac{3}{R^2C^2}$

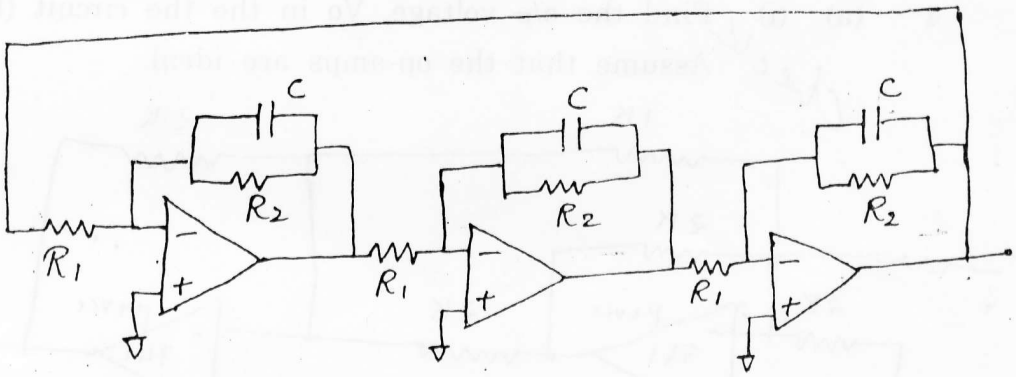

Fig. 5

(b) Give the classification of oscillators. Deduce the expression for gain and frequency of oscillation for Wien Bridge oscillator.

(c) Draw and explain the circuit that converts any irregular shaped waveform into square wave. Hence draw the characteristic waveform.

BB-5422

Instructions :

(1)

નીચે દર્શાવેલ ☛ નિશાનીવાળી વિગતો ઉત્તરવહી પર અવશ્ય લખવી.
Fillup strictly the details of ☛ signs on your answer book.

Name of the Examination :
☛ B. E. III (Sem. 6) (Chemical)

Name of the Subject :
☛ Analog Integrated Circuits

☛ Subject Code No. : 5 4 2 2 ☛ Section No. (1, 2,.....) : Nil

Seat No. :

Student's Signature

(2) Attempt **all** questions.

(3) Assume suitable data wherever necessary.

(4) Each section must be answered in **separate** answer book.

4 (a) (i) Draw the ckt diagram for narrow band pass filter using OPAMP and find maximum gain at cut-off frequency (Consider $C_1 = C_2 = C$) **10**

(ii) Define and classify filters. **2**

OR

4 (a) (i) Find the o/p voltage, Vo in the the circuit. (fig. 6) Assume that the op-amps are ideal. **8**

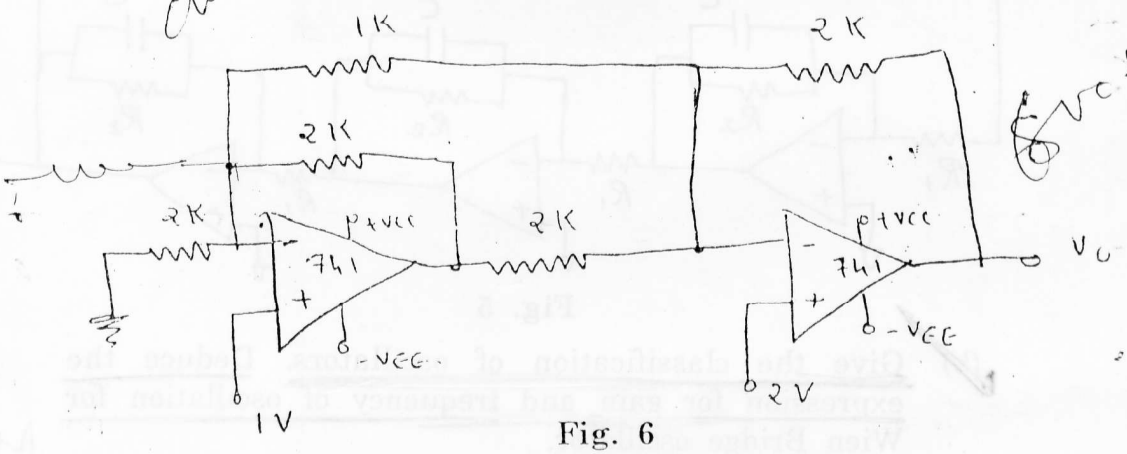

Fig. 6

(ii) Draw the ckt diagram using opAmp which limits the positive peak of sine wave i/p to 5 V and negative peak to –0.7 V. **4**

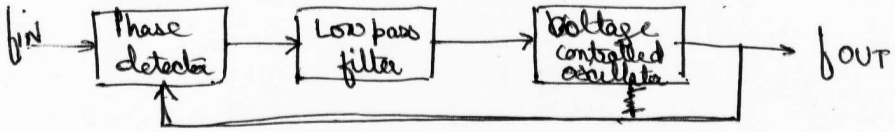

(b) Draw and explain block diagram of PLL. 6

5 (a) Draw and explain the internal block diagram of 555 timer IC. Discuss the function of each pin in detail. 8

(b) What do you mean by Gyrator circuit? For the fig. 7 shown find equivalent i/p impedance Z_{in}. 8

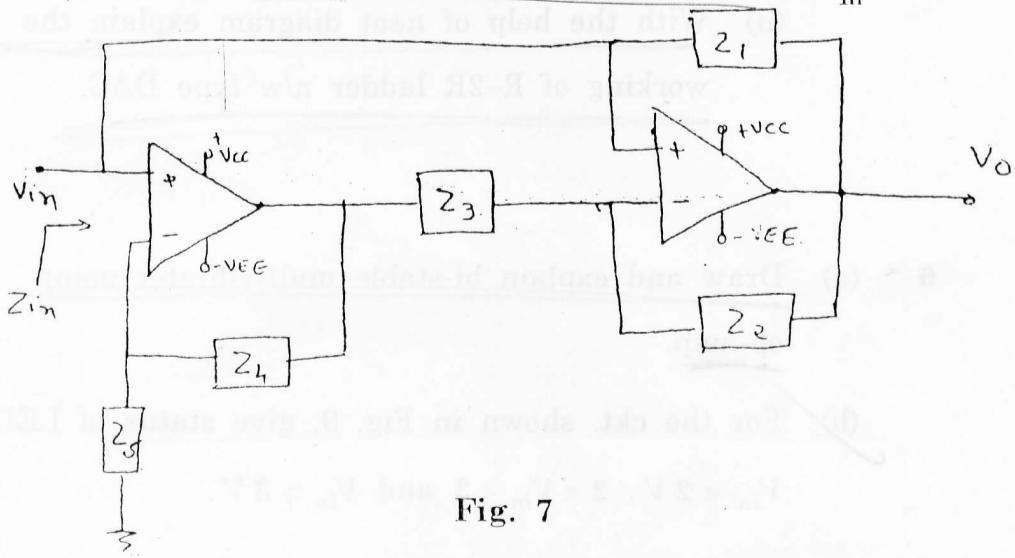

Fig. 7

OR

5 (a) An astable multivibrator using 555 timer is shown in following fig. 8. Explain it's operation and sketch the relevant waveforms. 8

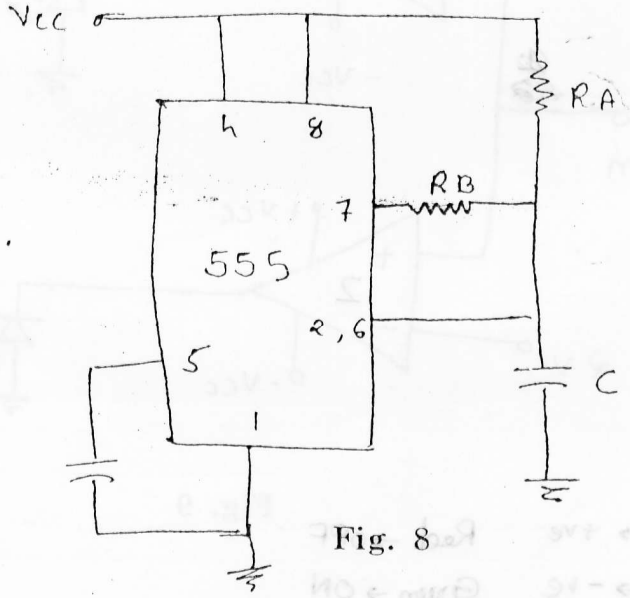

Fig. 8

(b) (i) Define the following parameters of DAC : 3

– Resolution

– Accuracy

– Conversion type

(ii) With the help of neat diagram explain the working of R–2R ladder n/w type DAC. 5

6 (a) Draw and explain bi-stable multivibrator using op-amp. 5

(b) For the ckt. shown in Fig. 9, give status of LEDS for $V_{in} < 2\,V$, $2 < V_{in} < 3$ and $V_{in} > 3\,V$. 4

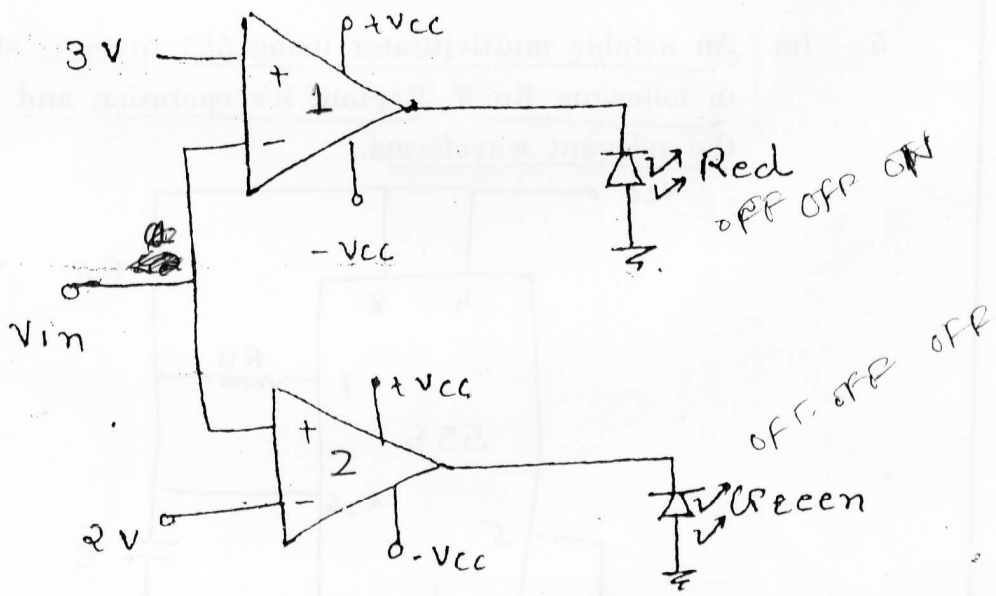

Fig. 9

$V_{in} < 2$ 1 → +ve Red → OFF
2 → −ve Green → ON

$2 < V_{in} < 3$ 1 → +ve Red → OFF
2 → +ve Green → OFF

$V_{in} > 3V$ Red ON
Green OFF

(c) For the ckt shown in **fig. 10** find the resistance value 5 such that it works as full wave rectifier.

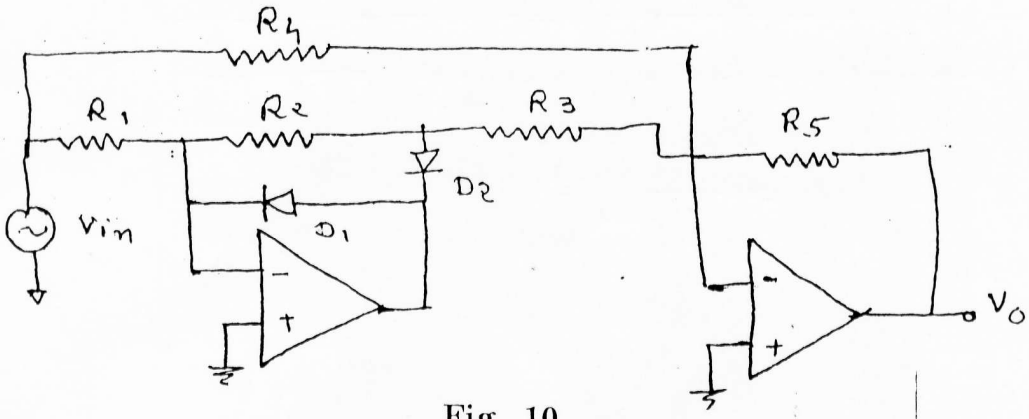

Fig. 10

(d) Draw and explain sample and hold ckt. using op-amp. 4

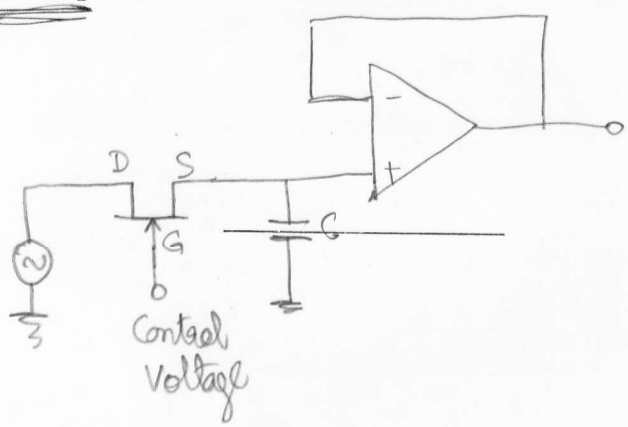

Control voltage = +ve 1 FET Conducts & acts as closed switch

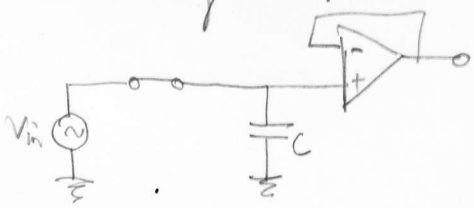

Capacitor charges to i/p voltage

Control voltage = 0 FET OFF acts as open switch

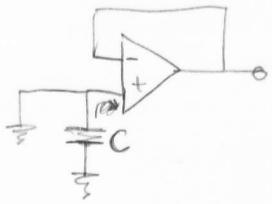

capacitor voltage is on hold